EMERGENCY RESTORATION SYSTEMS

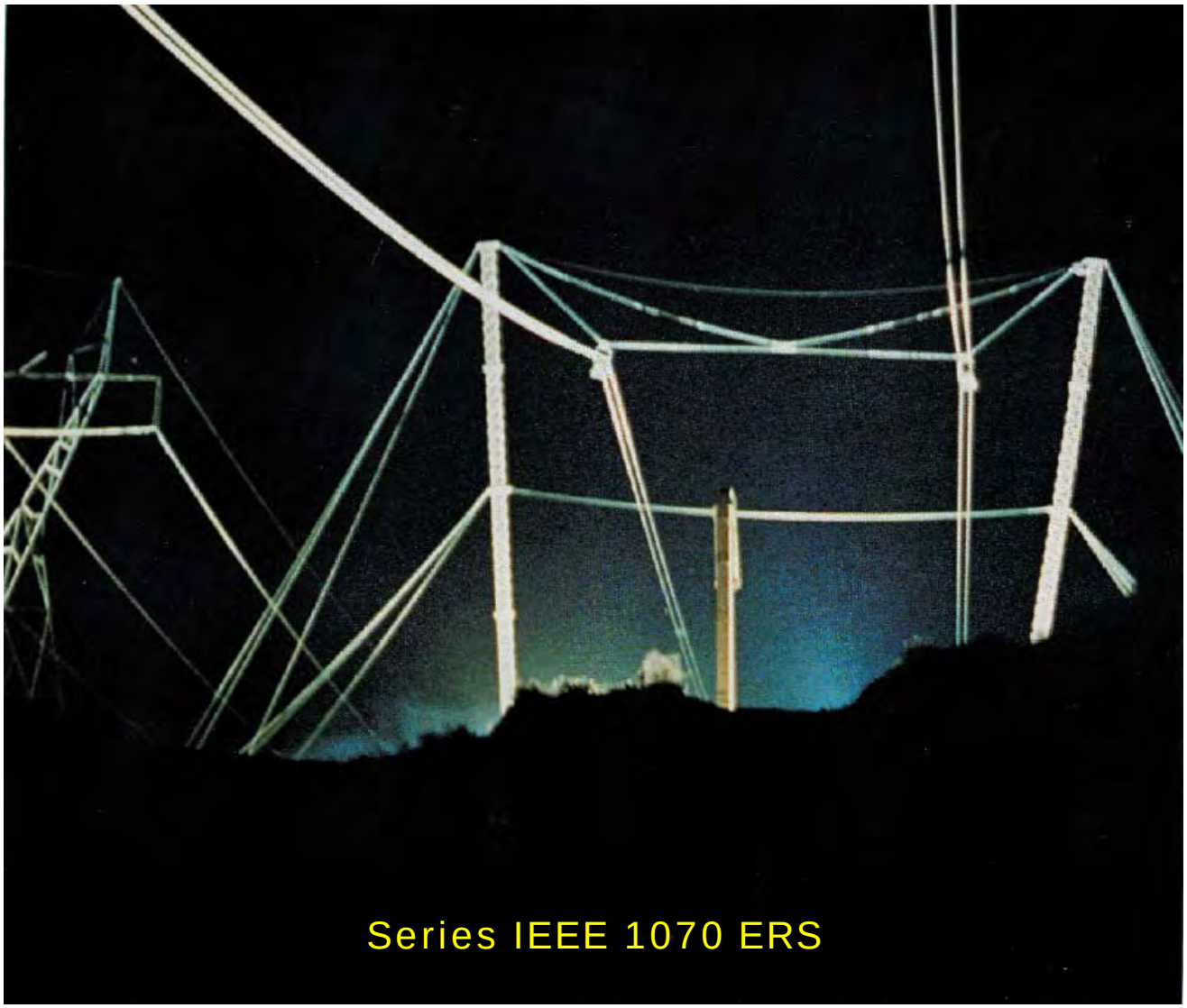

LINDSEY

Quality and innovations in transmission and distribution since 1947

QUESTION: WHY DO TRANSMISSION ASSET OWNERS NEED AN EMERGENCY RESTORATION SYSTEM (ERS)?

ANSWER: Transmission line emergencies do occur. Whether caused by exceptional acts of nature or by uncontrollable acts of mankind, transmission lines are vulnerable to mechanical failure.

When critical transmission lines are lost the economic and political costs can be extremely high. More and more, existing electrical transmission lines are working harder. When transmission lines from economical generation sources are lost, the power that they supplied must be replaced by more expensive sources. These replacement costs, or the cost of lost revenues, typically exceed millions of dollars per day. In some areas, the political consequences of prolonged disruption in the electrical power supply may far exceed the economic costs.

Whether the costs are economic or political, the world's dependence on electrical power makes a transmission Emergency Restoration System a requirement for any transmission asset owner.

Hurricanes and mud slides caused this failure of a 400kV tower.

High winds and flying debris caused failure of this 115kV steel pole line.

Dynamite charges toppled this 500 kV tower. A Lindsey Emergency Restoration Structure was used for a quick solution.

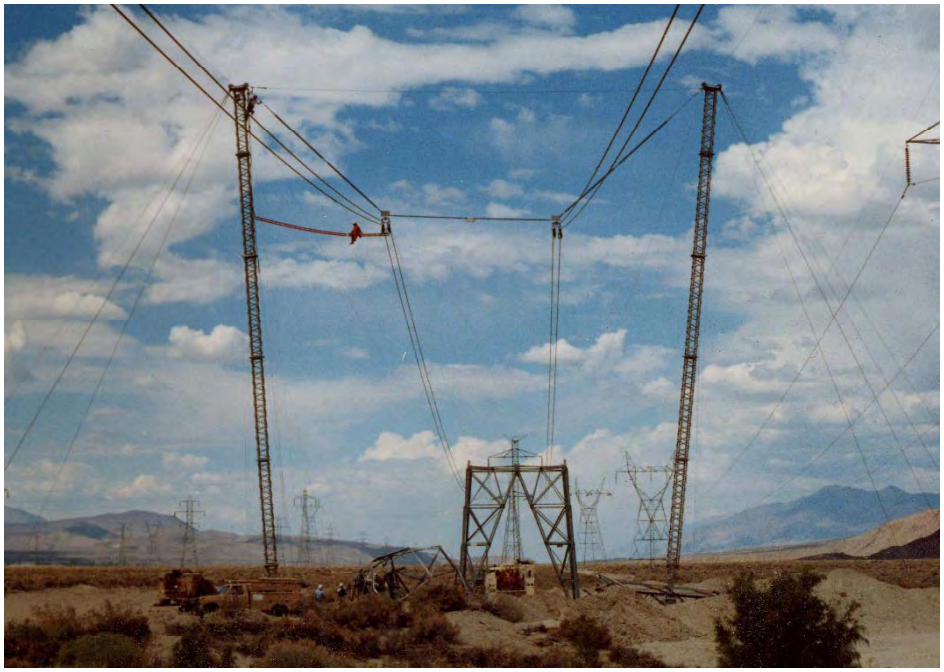

Sabotage of a critical 500 kV DC transmission line necessitated the erection of this Lindsey Emergency Restoration Structure. ***Total erection time was 5 ½ hours.***

Quality and innovation in transmission and distribution since 1947

ISO 9001:2008

LINDSEY

www.lindsey-usa.com

LINDSEY MANUFACTURING CO.
760 N. Georgia Ave., P.O. Box 877
Azusa, CA 91702 U.S.A.
Phone: 1-626-969-3471
Fax: 1-626-969-3177

Q: WHAT MAKES AN EFFECTIVE EMERGENCY RESTORATION SYSTEM?

A: Universal Modular Restoration Structures.

Typically, two of the most difficult requirements for restoration of a damaged transmission line are construction of a new foundation and replacement of damaged tower steel. Tower steel is often stocked; however, predicting the requirements for every possible failure and stocking all the necessary material is difficult and uneconomical.

A more effective and economical solution is the Lindsey Modular Emergency Restoration Structure. This structure requires no special foundation, can be used at any voltage level and for suspension, angle or tension structures, and has standardized components that can be shared between utilities.

RIGHT: *This Lindsey Emergency Restoration Structure was used to quickly restore the 400 kV tower destroyed by a hurricane and mud slide shown on the opposite page.*

A: Analysis and Planning.

Being prepared for emergencies is a requirement in any restoration system. The asset owner's engineering staff should pre-design restoration structures and be trained to quickly analyze any emergency situation that occurs. The Lindsey Emergency Restoration System (ERS) includes the user-friendly computer program, **ProSpot®** that can be used to plan the design and placement of the Lindsey Emergency Structures.

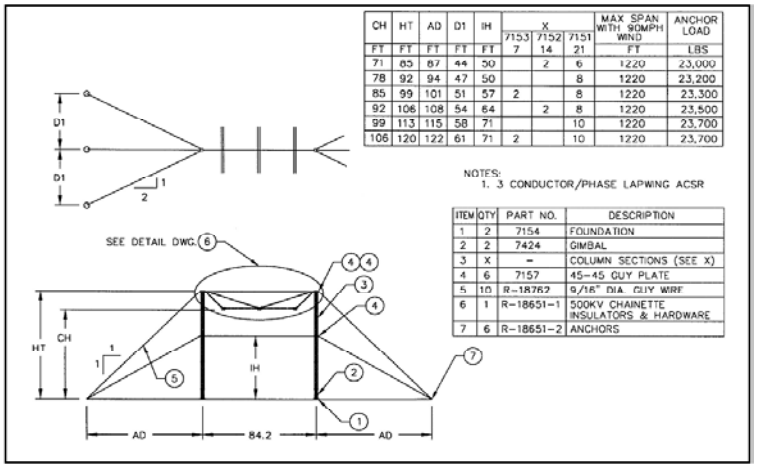

CH	HT	AD	D1	IH	X 7153	X 7152	X 7151	MAX SPAN WITH 90MPH WIND	ANCHOR LOAD
FT	FT	FT	FT	FT	7	14	21	FT	LBS
71	85	87	44	50		2	6	1220	23,000
78	92	94	47	50			8	1220	23,200
85	99	101	51	57	2		8	1220	23,300
92	106	108	54	64		2	8	1220	23,500
99	113	115	58	71			10	1220	23,700
106	120	122	61	71	2		10	1220	23,700

NOTES:
1. 3 CONDUCTOR/PHASE LAPWING ACSR

ITEM	QTY	PART NO.	DESCRIPTION
1	2	7154	FOUNDATION
2	2	7424	GIMBAL
3	X	–	COLUMN SECTIONS (SEE X)
4	6	7157	45–45 GUY PLATE
5	10	R–18762	9/16" DIA. GUY WIRE
6	1	R–18651–1	500KV CHAINETTE INSULATORS & HARDWARE
7	6	R–18651–2	ANCHORS

RIGHT: *A pre-designed standard Chainette for 500 kV allows field crews to quickly build structure without waiting for additional engineering.*

A: Trained Field Personnel.

A critical part of any restoration system is the training of field personnel in the erection of emergency structures. The Lindsey Emergency Restoration System includes extensive training in the assembly and erection of Emergency Restoration Structures. Field personnel are trained in various erection techniques using a variety of equipment.

Lindsey works closely with each asset owner, drawing on 22 years of experience in emergency restoration, to develop techniques that are appropriate for each utility's unique situation.

RIGHT: *Field crews practice assembly of the Lindsey Emergency Restoration Structure using a Gin Pole (or Derrick).*

LINDSEY MANUFACTURING CO.
760 N. Georgia Ave., P.O. Box 877
Azusa, CA 91702 U.S.A.
Phone: 1-626-969-3471
Fax: 1-626-969-3177

Q: WHAT CAN LINDSEY PROVIDE?

A: The complete ERS SYSTEM consisting of:

Series 1070 ERS Structure Components,

All Lindsey Series 1070 ERS Structure components are proof tested to all requirements of IEEE Std. 1070, "IEEE Guide for the Design and Testing of Transmission Modular Restoration Structure Components"

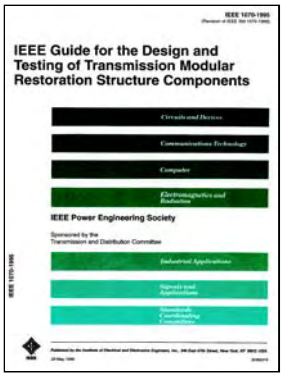

100% inspection insure straight columns.

Column Sections

All column sections are fabricated from lightweight, high strength structural aluminum alloy. The all-welded construction insures easy handling and eliminates the loss of small bolted pieces. Column sections are available in **7, 14** and **21 ft** (2.13, 4.27 and 6.40 m) sections, weighing **270, 415** and **565 lbs** (122, 188 and 256 kg), respectively. Eight standard ERS bolts hold each column section to the next. **Only one size of ERS bolt is required to assemble an entire ERS structure.**

Columns are easy to climb and allow up to four linemen to stand at one elevation.

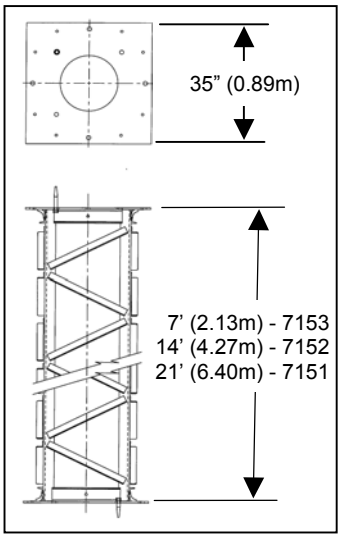

The end flanges protect the structure from damage, and guide pins speed assembly. Additional guy attachment locations are provided at each flange joint.

Foundations and Gimbal Joints

The Foundation, Part Number 7154 weighing **550 lbs** (250 kg) is made from aluminum plate and provides **25 ft^2** (2.32 m^2) of bearing surface. It is designed to be placed directly on the ground and staked in place.

The Gimbal or articulating joint, Part Number 7424 weighing **555 lbs** (252 kg), acts as a universal joint eliminating torsion loading of the final structure and allowing the assembled column to be rotated from the horizontal plane to the vertical position.

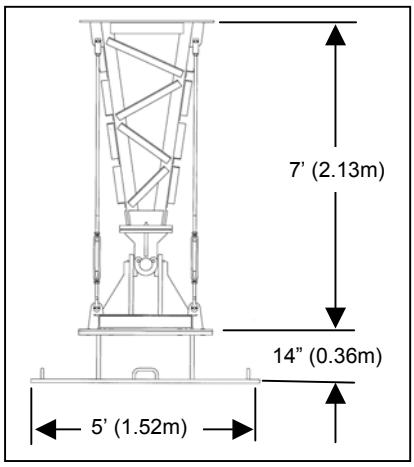

*Part No. **7154** Foundation and Part No. **7424** Gimbal Joint.*

Quality and innovation in transmission and distribution since 1947

ISO9001:2008

LINDSEY

www.lindsey-usa.com

LINDSEY MANUFACTURING CO.
760 N. Georgia Ave., P.O. Box 877
Azusa, CA 91702 U.S.A.
Phone: 1-626-969-3471
Fax: 1-626-969-3177

Series 1070 ERS Structure Components,

Guy Plates

High strength Guy Plates are made from structural aluminum plate and directly transfer the insulator loads across the structure and into guy wire loads. Each of the six attachment holes are designed to hold **30,000 lb** (134kN). Guy Plates weigh **50 lbs** (23 kg) and are located at the top of columns or placed between column sections using the standard ERS bolt.

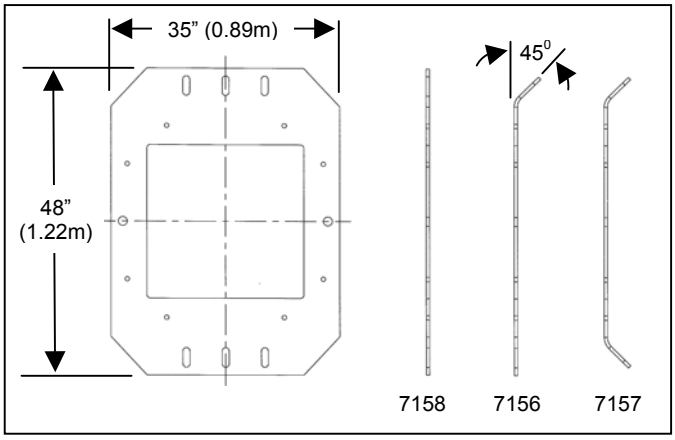

*Part No. **7157** 45⁰/45⁰ Guy Plate, shown above, can be located at the top of columns or placed between column sections.*

Box Sections

Box Sections are made from structural aluminum and are used for mounting horizontal post insulators. Box sections weigh **265 lbs** (120 kg) and are attached between or on the top of each column section flange using the standard ERS bolt. Box Sections have pre-drilled holes on two sides to allow mounting of any line post insulator. In addition to structures using Horizontal-Vee insulation, Box Sections are used on Tension towers for mounting the jumper insulation and for maintaining an 18 inch (460 mm) vertical conductor spacing.

*Left, a **7155** Box Section is used to provide vertical bundle separation of a 4-conductor per phase Tension ERS Structure.*

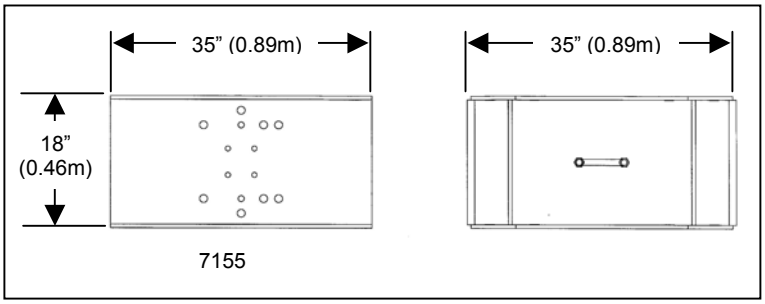

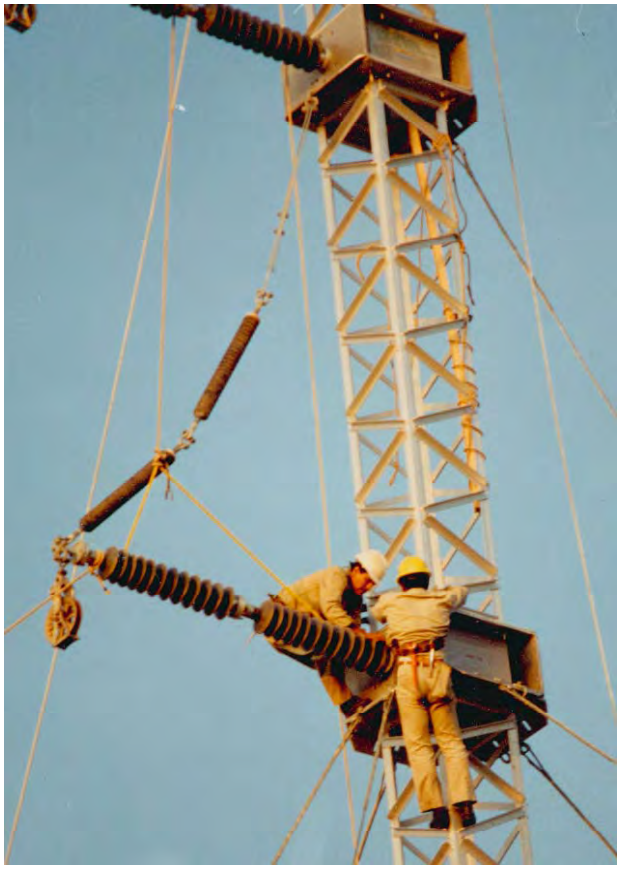

*Above, the **7155** Box Section is used to support the post insulator used in a typical Horizontal-Vee ERS Structure.*

LINDSEY MANUFACTURING CO.
760 N. Georgia Ave., P.O. Box 877
Azusa, CA 91702 U.S.A.
Phone: 1-626-969-3471
Fax: 1-626-969-3177

Insulators and Hardware,

The Lindsey Emergency Restoration Systems are supplied with light weight non-ceramic insulators conforming to all applicable electrical and mechanical requirements of ANSI C29.11 and IEC 1109. Suspension insulators are given a routine test load (RTL) of 20,000 lbs (111 kN) and have an ultimate mechanical load of 50,000 lbs (222 kN). The post insulators will have a fiberglass rod diameter to meet the expected compression loading. When the ERS System is required to restore more than one transmission voltage, multiple insulators are used that can be linked together.

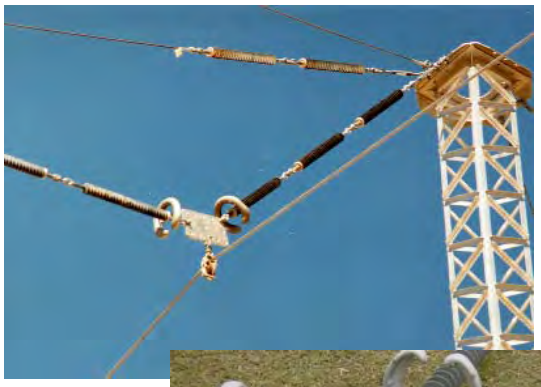

Lindsey guarantees the assembly and fit of all hardware assemblies. A limited number of standard hardware components will be provided in order to minimize confusion during emergencies. For example, only one size of anchor shackle is typically provided. All hardware is rated to withstand the maximum structure loading. All ferrous materials are galvanized. Routine mechanical pull tests will be applied to all hardware items in accordance with IEEE Standard 135.61-1997.

Lindsey will guarantee the fit, strength coordination and corona performance of all Hardware Assemblies.

Anchors,

Anchoring is a critical element of any guyed Lindsey Emergency Restoration System. Depending on the prevailing soil conditions, a number of different anchoring arrangements can be provided. In general, Lindsey does not recommend temporary anchors for construction, but only the use of the permanent anchors during construction of the structures. For normal soil conditions, Lindsey supplies hydraulically installed self-locking type anchors can be installed in 15-20 minutes. The advantage of these types of anchors, besides their speed of installation in normal soils, is that they are proof tested during installation. Anchor installation kits are supplied with these types of anchors.

Left to right: Starting to install, installing and final locking of the normal soil density hydraulically installed self locking anchor. A Complete anchor installation kit is shown above right.

Another anchor that Lindsey can supply is the cross plate anchor shown at the right. These anchors are a very common, universal and a proven anchoring method, requiring minimal installation equipment. In normal soils each Cross plate anchor will require approximately 4 hours to install by hand.

LINDSEY MANUFACTURING CO.
760 N. Georgia Ave., P.O. Box 877
Azusa, CA 91702 U.S.A.
Phone: 1-626-969-3471
Fax: 1-626-969-3177

Anchors,

For low-density soil conditions, such as, swamp or peat, high strength triple helix screw anchors *can be provided*

Rock anchors and dead weight anchoring systems can also be supplied to meet specific requirements.

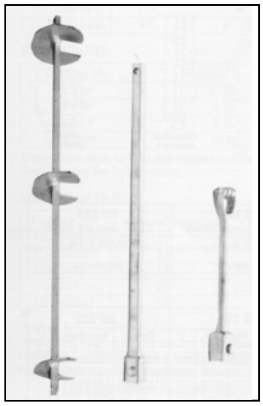

Right: Typical triple helix anchor and manual installation procedures in Swamp areas. When installation equipment is not available, these anchors can be installed manually.

Construction Tools,

All necessary construction tools and hand tools can be provided for assembly and erection of the structure, and lifting of the conductors. An R-16289 gin pole, shown at the right, is made from high strength aluminum alloy. The R-16289 gin pole is supported on one corner of a column section and allows for the lifting of column sections to the top of the structure. All necessary snatch blocks and rigging ropes are supplied with the gin pole. The gin pole has a davit arm to keep loads clear of the structure while being raised. Sections can be raised using manpower, or an optional capstan. The ½ ton hydraulic capstan winch has foot pedals controls and is powered by the same hydraulic power unit supplied with the self-locking anchor installation kit.

The Lindsey R-16289 Gin Pole

The Lindsey 7004 Capstan and Hydraulic Power Supply

The 7060 Double Roller & Clamp eliminates the need to transfer conductors to clamps after stringing.

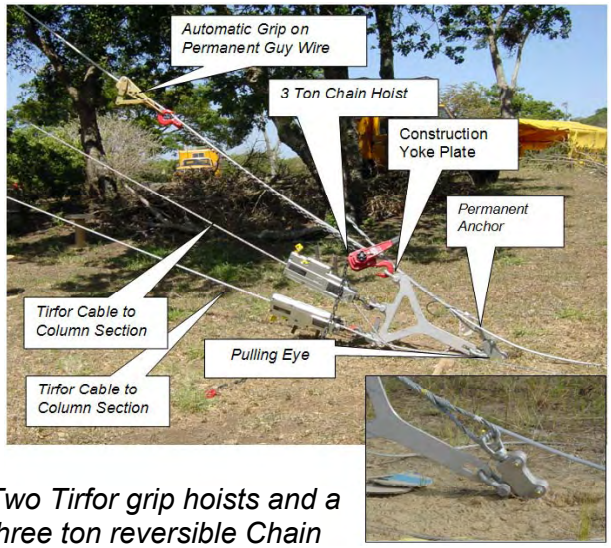

Two Tirfor grip hoists and a three ton reversible Chain Hoist are attached to an Anchor Construction Yoke , which is attached to the anchor with a R-17103-10 Pulling Eye.

LINDSEY MANUFACTURING CO.
760 N. Georgia Ave., P.O. Box 877
Azusa, CA 91702 U.S.A.
Phone: 1-626-969-3471
Fax: 1-626-969-3177

Storage and Transportation,

Lindsey Series 1070 ERS can be shipped in 40 foot ocean cargo storage containers or on standard flat bed trucks. Lindsey can package all ERS tools and accessories, such as insulators, hardware, anchors and gin poles, in 20 foot containers for safe transport and secure storage.

ERS Structures are typically transported near the job site using flat bed trucks and then unloaded. From there, the ERS Structures can be taken to the construction site by hand, small truck or helicopter.

All the tools and accessories including anchors, insulators, guy wires and hardware can be packed in 20 foot containers.

The Lindsey ERS Structures are made from corrosion resistant high-strength aluminum alloy. Unlike thin galvanized steel structures, they can be stored outside indefinitely, even in marine environments. The insulators, hardware and tools are usually stored in 20 foot containers or other secure warehouse facility.

These Lindsey ERS Structures have been stored outside in a marine environment for over 20 years.

All terrain, trucks or helicopters can be used to transport the material to the job site.

Small helicopters are effective in moving material to remote construction sites.

Small all terrain vehicles can be used to transport ERS Structures and materials directly to the construction site.

LINDSEY MANUFACTURING CO.
760 N. Georgia Ave., P.O. Box 877
Azusa, CA 91702 U.S.A.
Phone: 1-626-969-3471
Fax: 1-626-969-3177

ProSpot ® Computer Programs,

Another advantage of the Lindsey ERS is our exclusive ProSpot® ERS computer analysis programs that allow engineers to rapidly design new restoration structures that were not originally planned when the system was purchased. These computer programs were designed with emergency conditions in mind:

- They are easy to learn, don't require large amounts of input data and can be used to design a site specific ERS in minutes.
- Output from the Lindsey ERS computer programs can be used to directly construct most ERS structures.
- The Lindsey ERS Programs provide quick calculations of construction loads.

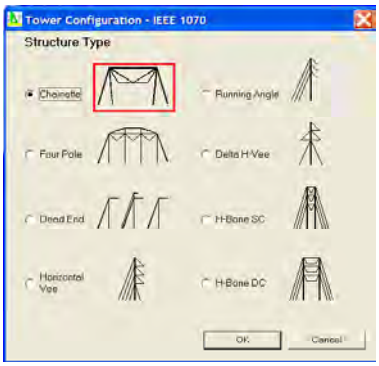

Step 1: *Select the ERS structure to be analyzed*

The Lindsey computer program can be copied as many times as deemed necessary by the asset owner, for their own use, without incurring additional licensing fees.

The ProSpot® programs are provided with instruction manuals that explain the structural theory used, and a Field Instruction Manual as part of the ProSpot® help menu. Data can be processed in either both **English** or **Metric units**, and can be switched at any time.

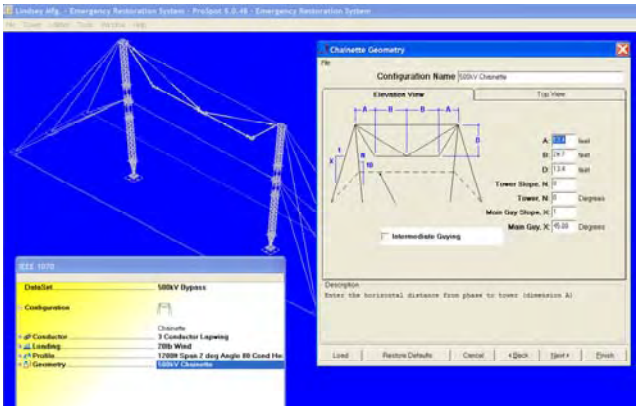

Step 2: *Select previously stored data or input new data.*

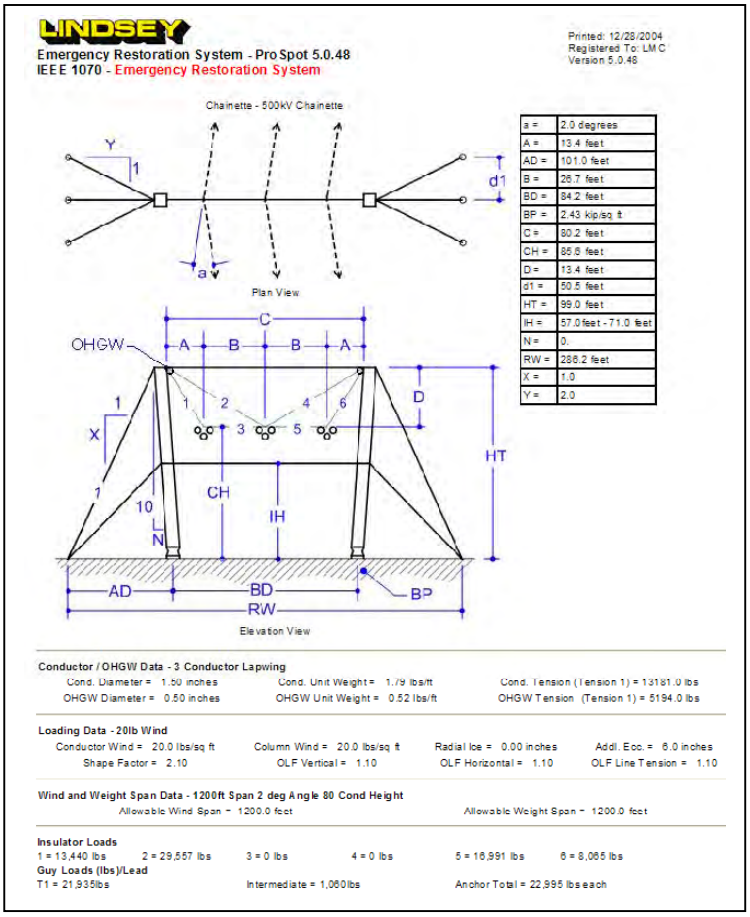

One Page Output

Step 3: *Calculate the results. Shown at the left is a one page print out of the results. A Plan and Elevation view are shown along with input data: conductor, loading and span data. The output shows the insulator and anchor loads.* ***If the structure does not support the required loads, NO OUTPUT is printed.*** *This is a feature only available with the Lindsey ProSpot® Program.*

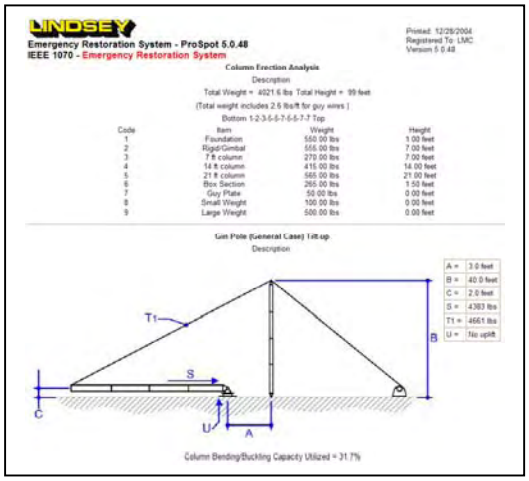

Construction Loads

ProSpot® *can quickly analyze a variety of construction loads, as shown in the printout at the right.*

LINDSEY MANUFACTURING CO.
760 N. Georgia Ave., P.O. Box 877
Azusa, CA 91702 U.S.A.
Phone: 1-626-969-3471
Fax: 1-626-969-3177

Training,

The Lindsey Emergency Restoration System includes extensive training performed by experienced application engineers. The Asset Owner's engineering staff will be trained in the use of the **ProSpot®** computer program.

Classroom training session for the ProSpot® computer program.

Training of field personnel takes place at the Asset Owner's site, using the normal equipment available to the field personnel, as well as the construction tools provided by Lindsey. Field training typically includes construction of a variety of ERS structures using several construction techniques. Special emphasis is given to: anchoring, assembling of modular structures, fixing of foundation plates, erecting of structures on the foundation, guying the tower and stringing of conductor. Specific instructions are given for installation of ERS using Gin Pole, crane and helicopter techniques.

Lindsey training insures that field personnel acquire proficiency in restoring failed structures so that they can take up this work independently.

and Experience.

Lindsey has supplied over 1000 Emergency Restorations System structures to more than 50 Electric Transmission Asset Owners, in over 20 countries. Our extensive experience in tailoring a complete Emergency Restoration System insures that your specific needs will be met.

Quality and innovation in transmission and distribution since 1947

ISO9001:2008

LINDSEY

www.lindsey-usa.com

LINDSEY MANUFACTURING CO.
760 N. Georgia Ave., P.O. Box 877
Azusa, CA 91702 U.S.A.
Phone: 1-626-969-3471
Fax: 1-626-969-3177

Q: WHAT ARE SOME EXAMPLES OF LINDSEY ERS STRUCTURES?

A: *Suspension type,*

Chainette: *This 400kV ERS is supporting the line during re-construction of the permanent tower.*

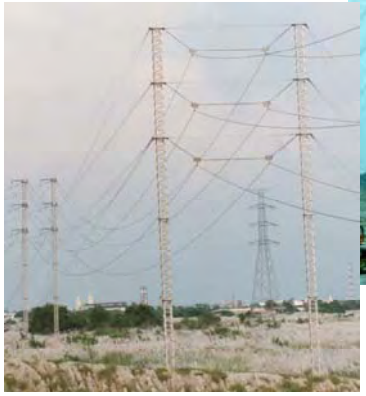

Double Circuit Herringbone: *This Double Circuit 230kV ERS was built after a major disaster. The picture at the left shows the same ERS still in service 8 years later.*

Four Column: *These 500kV ERS are supporting the line while a substation is being built below it.*

Chainette: *These 230kV ERS were built for an emergency bypass and have been in service for 10 years.*

LINDSEY MANUFACTURING CO.
760 N. Georgia Ave., P.O. Box 877
Azusa, CA 91702 U.S.A.
Phone: 1-626-969-3471
Fax: 1-626-969-3177

Suspension and Angle type,

Four Column: *This 400kV ERS was built in one day to support lines from a nuclear plant. Spans were over 800m on either side.*

Single Phase Running Angle: *This 500kV ERS was built to restore power after the permanent tower was sabotaged.*

DC Chainette: *This +/-500kV Direct Current ERS was built in One day when an airplane destroyed the permanent tower.*

Horizontal-Vee: *This 345kV ERS is 48m tall and was built to support the line while the permanent tower was moved.*

Three Phase Running Angle: *This 30 degree 500kV ERS was built to restore power after the permanent tension tower was sabotaged.*

Angle Horizontal-Vee: *These 220kV ERS were used to restore both circuits of a tower washed into a flooded river.*

LINDSEY MANUFACTURING CO.
760 N. Georgia Ave., P.O. Box 877
Azusa, CA 91702 U.S.A.
Phone: 1-626-969-3471
Fax: 1-626-969-3177

Angle and Tension type.

Horizontal 60 Degree Tension: *These ERS Dead Ends were used to build a temporary 500kV bypass Line*

Horizontal 90 Degree Tension: *These 400kV, 90 Degree Tension or Dead End ERS were built as part of a bypass during construction on the substation.*

Vertical Three Phase Tension: *This 230kV ERS In-Line Tension ERS was built after a major disaster. The picture above shows the same ERS 8 years later.*

Vertical Three Phase Full Tension: *This 400kV ERS Full Tension 3-Phase Dead End ERS was built as part of a bypass line. Note there are 4 subconductors per phase*

LINDSEY MANUFACTURING CO.
760 N. Georgia Ave., P.O. Box 877
Azusa, CA 91702 U.S.A.
Phone: 1-626-969-3471
Fax: 1-626-969-3177

Q: WHAT ARE SOME CONSTRUCTION METHODS USED WITH LINDSEY ERS?

A: Any of the following, and more:

Manpower and Gin Pole: *This 230kV ERS Tension Structure was built by manpower only, in the Himalayas. The 3-Phase Dead End spanned 710m to the structure in red circle.*

Helicopter(1): *Complete structures can be flown in. The 99 ft (30.2m) Column with foundation, gimbal, column sections and guy plates weighs 3730lbs (1692kg). With 4 pre-attached guy wires 3987lbs (1809kg), as shown to the right.*

Helicopter(2): *The 99 ft (30.2m)Column with foundation, gimbal, column sections and guy plates is being tilted up. The helicopter only needs to lift 1696lbs (6.6kN) including pre-attached guy wires and the helicopters own downwash.*

Small Crane: *A complete ERS Column can be picked up with a small crane at it's center of gravity, and the gimbal "walked" to the foundation.*

Winch Line and Erection Jib: *A complete ERS Column can be tilted up with a winch line and a small Erection Jib.*

LINDSEY MANUFACTURING CO.
760 N. Georgia Ave., P.O. Box 877
Azusa, CA 91702 U.S.A.
Phone: 1-626-969-3471
Fax: 1-626-969-3177

Q: HOW CAN WE ORDER AN ERS SUITED TO OUR NEEDS?

A: Contact Lindsey Manufacturing Co.:

You can contact Lindsey Manufacturing Company directly or through one of our representatives. Our in-house application engineers or sales representatives will work with your engineering and operating personnel to determine the most efficient and economical Emergency Restoration System for your application.

In order to prepare an Emergency Restoration System proposal, Lindsey Manufacturing Company needs to know certain information about your critical transmission lines. Please fill out the "ERS Questionnaire" in the CD at the right (also available from our web site). Using the "ERS Questionnaire", we will provide you with a Technical and Financial Proposal for your consideration.

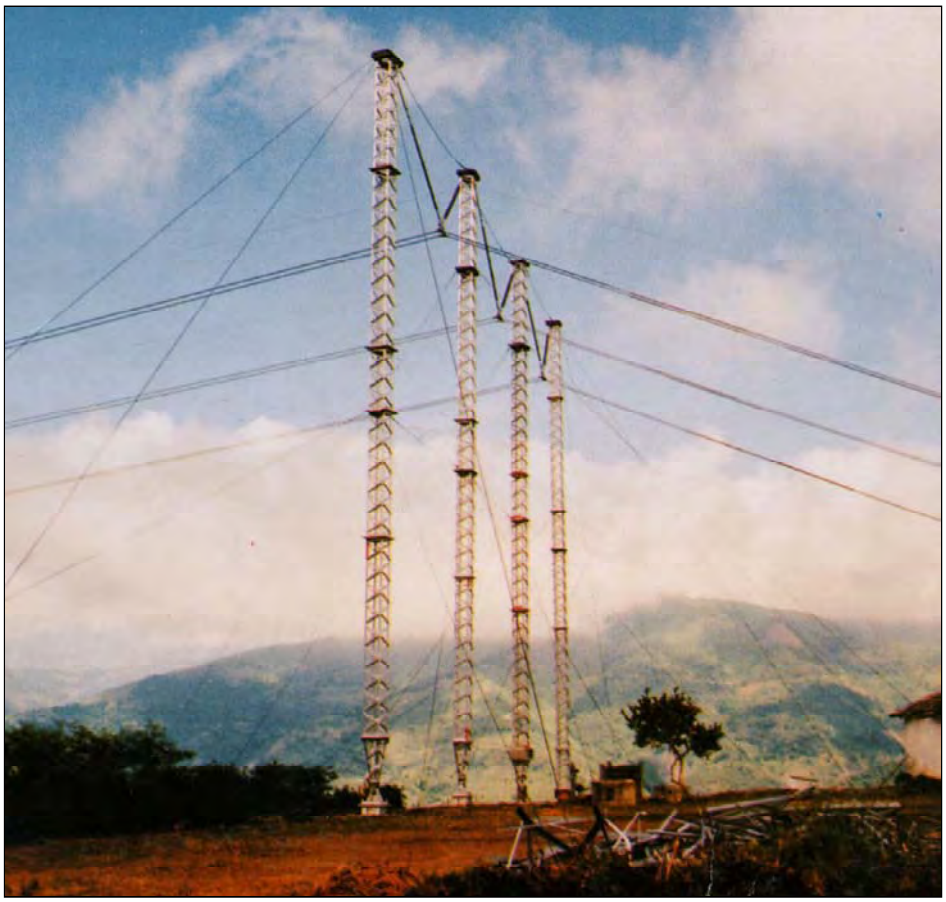

Contained In the CD at Right:

1. ***ERS Questionnaire**, to be filled out and emailed to mail@lindsey-usa.com*
2. *Demonstration copy of **ProSpot**®*
3. *Instructions on how to install **ProSpot**®*
4. *Video on the Lindsey ERS: "Are you prepared? (English Language)"*

After your order is placed:

Lindsey will fabricate and ship your order. Shortly after arrival of all your ERS materials, training seminars will be scheduled at a mutually agreed upon time for both your engineering and field personnel.

In the future, upgrade in computer software and information on the latest development will be made available to you. As an owner of a Lindsey Emergency Restoration System, you will be trained to handle almost any emergency that arises. However, should you need us; Lindsey Manufacturing Company is always available to assist you.

LINDSEY MANUFACTURING CO.
760 N. Georgia Ave., P.O. Box 877
Azusa, CA 91702 U.S.A.
Phone: 1-626-969-3471
Fax: 1-626-969-3177

Do you need to restore damaged transmission lines fast?

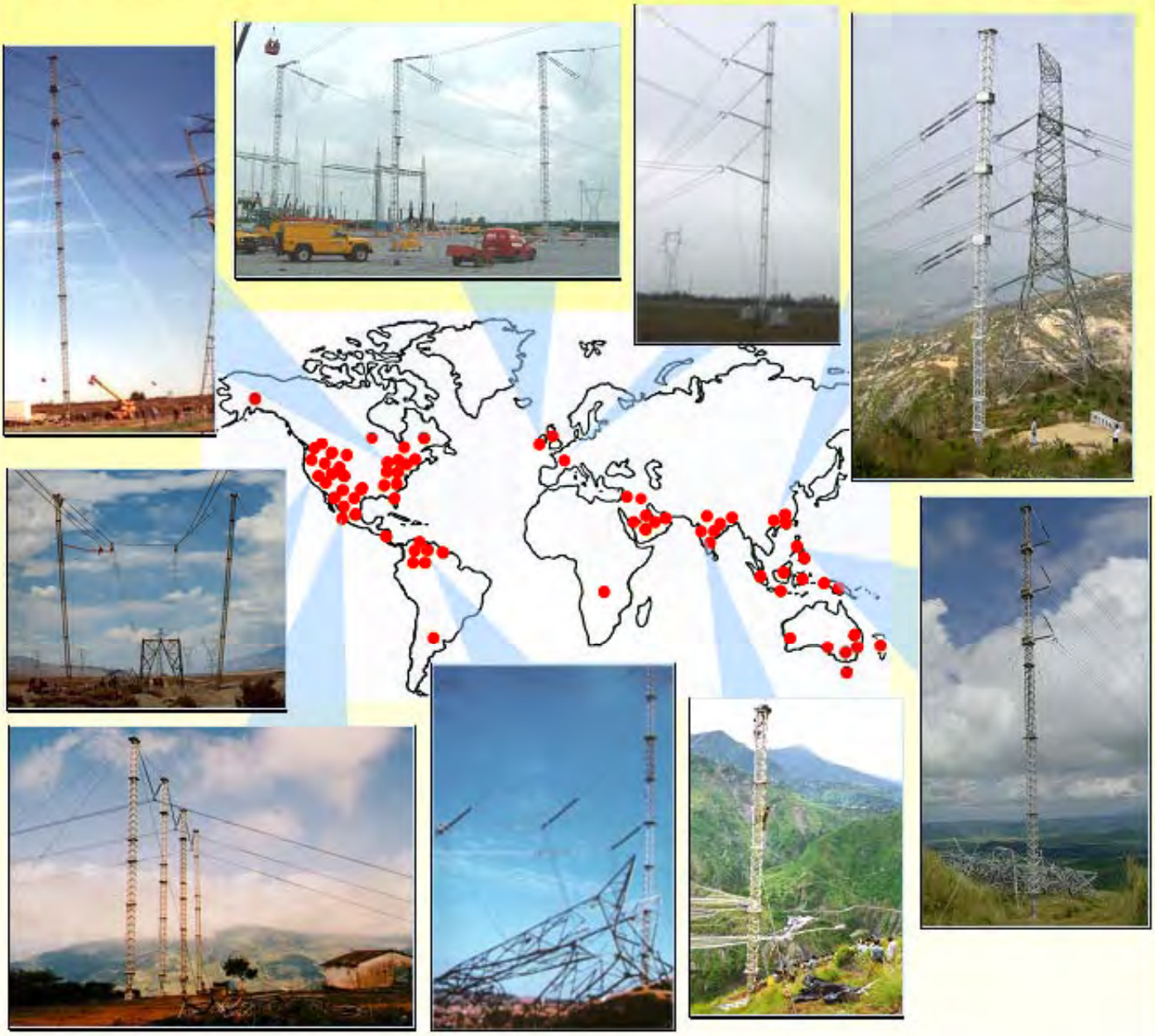

LINDSEY

Lindsey Manufacturing can help you!

We've supplied over 1000 Emergency Restoration Systems (ERS) worldwide for natural disasters, sabotage and planned outages. The Lindsey ERS is fast, versatile and proven.

We've got the right ERS for you!

Contact us at: Ph. 1-626-969-3471, Fax 1-626-969-3177

www.lindsey-usa.com

ISO9001:2008

1070WI050113